BORDOLESE 4 0.750



KMC GLASS

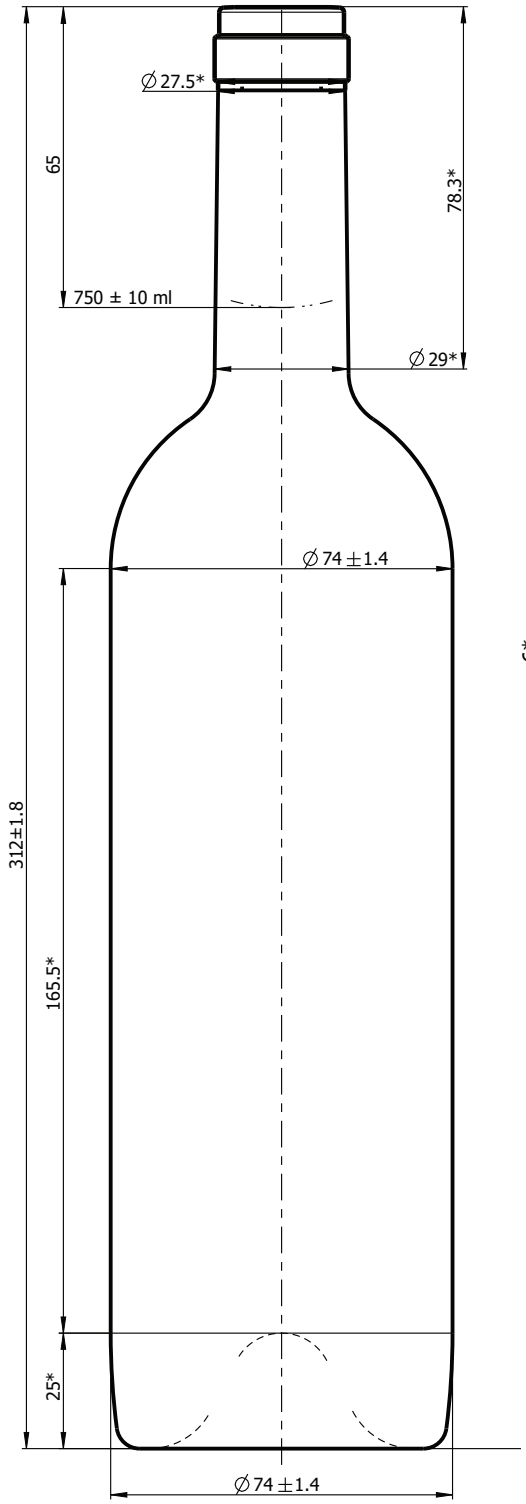

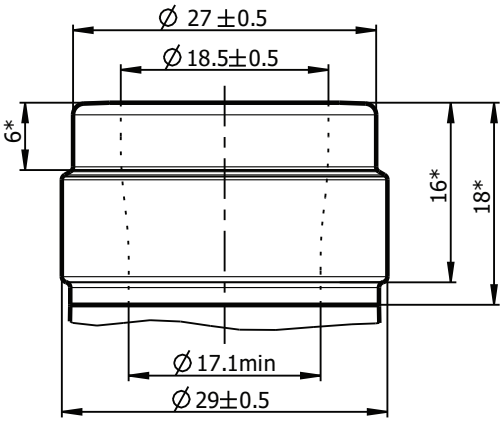

- Bordolese 4
- Filling CAP - 750 ml
- Weight - 460±10 g
- Height - 312±1.8 mm
- Diameter - 74±1.4 mm
- Entrance Bore Diameter - 18.5±0.5 mm
- Color - Olive Green

www.kmc.glass
sales@kmc.glass

KMC GLASS